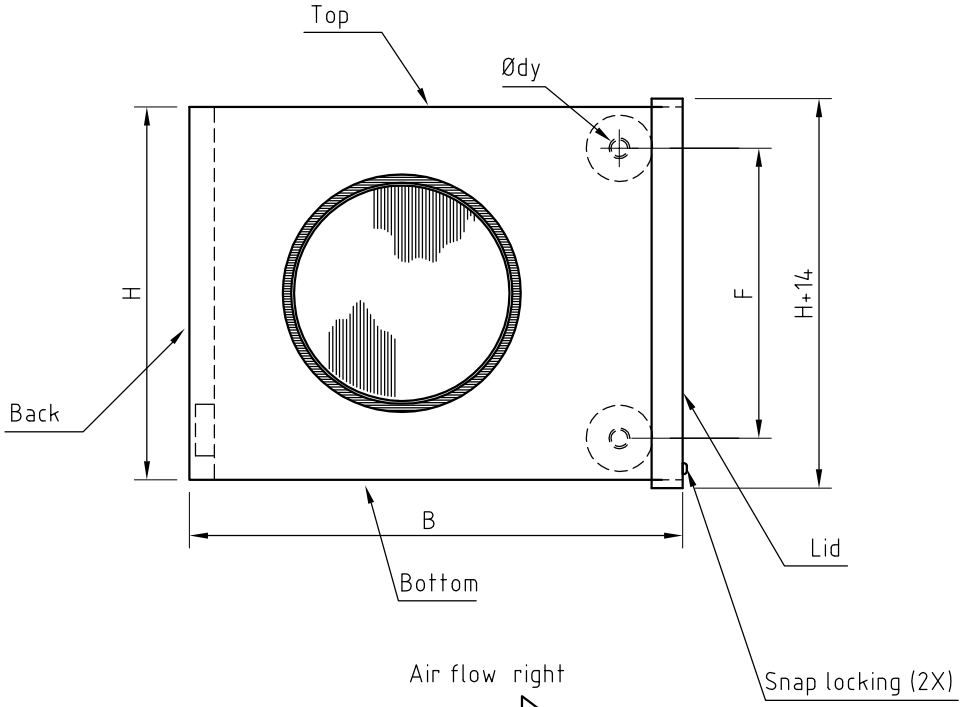

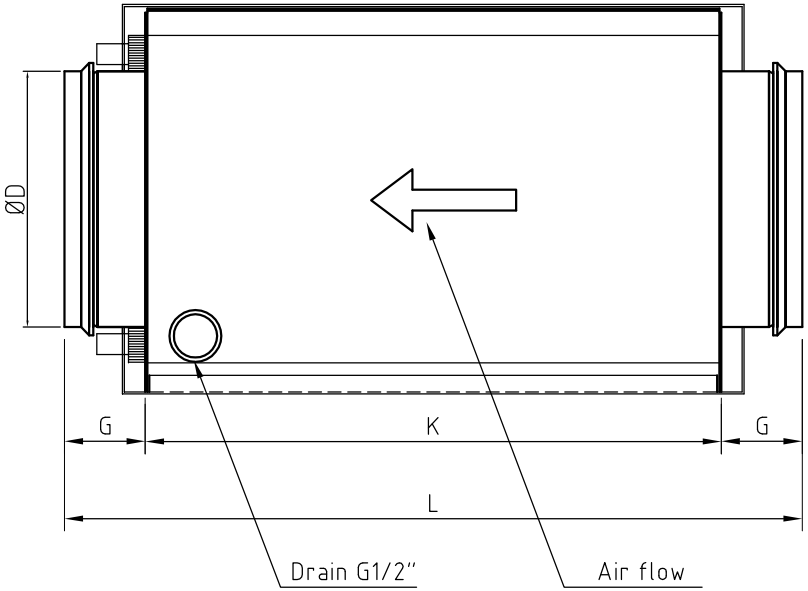

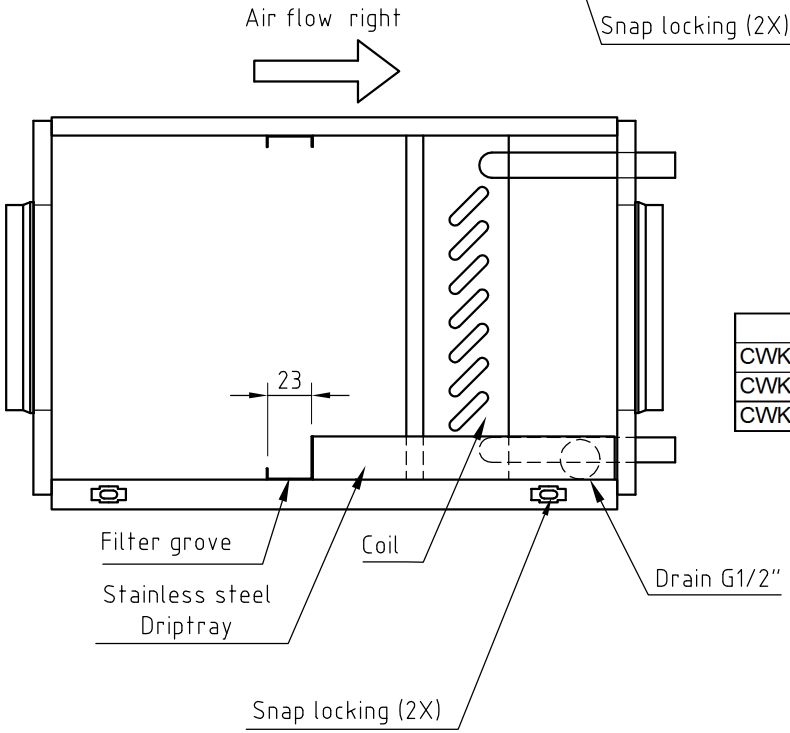

Condensation insulation on top, bottom, back and in the lid.

Typ	Dimension							
	ØD	H	B	ØDY	F	G	K	L
CWK 200-3-2,5-R	200	330	415	22	250	40	396	476
CWK 250-3-2,5-R	250	405	491		325			
CWK 400-3-2,5-R	400	529	715	22	425	55	450	560

Det.No.	Qty.	Designation	Material/ Dimension	Remark
	1			ALZ

Designed by	Drawn by	Approved by	Standard	Scale	Replaces	Replaced by
GM	GM	GM				

VEAB Heat Tech AB

CWK–R, General Drawing
Filter grove, snap locking, insulation lid

Date 131003

Drawing No. 56552

Edition 1

No.	Qty.	Modification/Revision/Message	Date	Resp.	No.	Qty.	Modification/Revision/Message	Date	Resp.

This drawing and its contents is the property of the company and may not be copied or otherwise disclosed to any third part without our consent. Contraventions will be prosecuted.